

Catalina Series

CAT-1PDT

DIRECT SUSPENDED PENDANT

Brilliant by Design™ — The Catalina CAT-1PDT luminaire brings refined architectural presence to spaces that demand precise downward illumination.

CAT-1PDT pairs a compact decorative form with configurable optics, multiple lumen packages, and a wide range of finish options. Power down suspension provides a minimal and clean installation keeping the focus on the fixture's elevated aesthetic. The result is a highly versatile suspended fixture that delivers visual comfort, optical precision, and elevated material expression in a form tailored to the specific needs of each interior environment.



FEATURES

- A 1.2" aperture suspended pendant direct luminaire in a compact decorative form.
- Two-piece heavy-gauge 6063 extruded aluminum housing.
- Remote mounted driver contributes to the sleek architectural form factor.
- Minimalist Suspension Cord
  - 1/8" diameter black, white, or silver with gloss finish.
  - Minimizes visible wiring for a clean, architectural aesthetic.
  - Matching black, white, or chrome mounting hardware available.
  - Carries positive and negative conductors within each cable.
  - Suspend up to 10' from the canopy to fixture.
- Innovative Microstructure EdgeTech Optics™ delivers unparalleled optic control and exceptional performance with seamless illumination and uniformity. Specify Batwing, Glare Control, and Diffused (Lambertian) Direct Optics.
- Direct lumen packages up to 1111 lm/ft. Specified Lumen Outputs (SLO) available.
- 90+ CRI standard; 2700K, 3000K, 3500K, 4000K, 5000K; Tunable White available (Direct Only) via DALI and 0-10V control systems.
- Universal 120–277V with 0–10V, DALI, DMX/RDM, Lutron EcoSystem, and specifiable driver options. Remote Drivers only.
- Power down suspension provides a minimal and clean installation keeping the focus on the fixture's elevated aesthetic.
- Low voltage positive and negative conductors power the fixture from the remote driver.
- Seamless continuous rows up to 250' with no lens breaks, pixelation, or hotspots.
- Emergency battery, Chicago Plenum, and JA8 options available.
- Premium powder coated wood grain finishes available along with Ceramic White, Corten Steel, Charcoal Gray, Matte Black and Silver Anodized finishes.
- Proudly crafted in Huntington Beach, CA - USA.
- BABA compliant in most configurations. Consult factory for details.
- Backed by our 5 Year Warranty.

EXTANT ARCHITECTURAL LIGHTING™
15161 Triton Lane, Huntington Beach, CA 92649 | O 714-362-8099 | ExtantLighting.com
* Due to our culture of always striving for product enhancement, specifications and information within this document are subject to change without notice. 2020 Extant Lighting, Inc. All rights reserved.

ORDERING INFORMATION

Project: _____

Date: _____ **Type:** _____

Product Family	Length	Direct Lumen Output	Direct Optics	Color Temp	Voltage	Driver
CAT-1PDT						
CAT-1PDT Catalina Series Direct 1.2" Aperture (Suspended)	__ Specify Length in 6 inch Increments* *2ft Minimum	**DLL** Low (259 lm/ft @ 1.67 w/ft)* **DML** Medium (574 lm/ft @ 3.94 w/ft)* **DHL** High (1111 lm/ft @ 8.3 w/ft)* **SLO-XX** Specified Lumen Output Available.** *Delivered lumen output & consumed wattage based on "MEODF 35" (90 CRI - 3500K). See SLO Configurator for alternate outputs. **See SLO Configurator at ExtantLighting.com for appropriate "XX" output.	**MEODF** Diffusing **MEOBW** Batwing **MEOGC** Glare Control	**27** 2700K **30** 3000K **35** 3500K **40** 4000K **50** 5000K **TW** 2700K-6500K (90+ CRI) **XX** Optional Color Temp & CRI Available 90+ CRI is standard unless otherwise noted.	**VU** 120V-277V	**D** 1% 0-10V* **DN** Non Dim **DELV** 1% Electronic Low Voltage Dimming (Reverse Phase dimming-120V only)** **DTRIAC** 1% Electronic Low Voltage Dimming (Forward Phase dimming-120V only)** **DL1** Lutron Hi-Lume 1% EcoSystem **DE** .1% 0-10V **DD1** 1% DALI **DDE** .1% DALI **DMX** .1% DMX/RDM **DTW** 1% 0-10V Tunable White **DT8** 1% DALI Tunable White **XX** Other (Please Specify) * Dim to Off available. Please Specify "-OFF" next to driver option if required.

Finish	End Cap Style	End Cap Finish	Options	Cable Length
CRP Powder Coated Corten Steel **WG1** Premium Light Wood Grain* **WG2** Premium Medium Wood Grain* **PCF** Premium Custom Finish* **CWP** Powder Coated Matte Ceramic White **CGP** Powder Coated Matte Charcoal Gray **MWP** Powder Coated Matte White **BP** Powder Coated Matte Black **SA** Powder Coated Silver Anodized **CC** Powder Coated Custom RAL Color *Extended lead times may apply to premium finishes	**NST** Inset End Caps* **FLSH** Flush *NST option extends the shroud 0.5" on both ends so a nominal 4' fixture is 49"	**ECRP** Powder Coated Corten Steel **ECWP** Powder Coated Matte Ceramic White **ECGP** Powder Coated Matte Charcoal Gray **EMWP** Powder Coated Matte White **EBP** Powder Coated Matte Black **ESA** Powder Coated Silver Anodized **ECC** Powder Coated Custom RAL Color	**EMB(X)** Emergency Battery Pack(s)* **EMC** Auxillary Generator Circuit(s) **CP** Chicago Plenum Approved **JA8** JA8 Compliant *EMB: Specify quantity (X) of battery packs per run. Consult factory for compatibility with sensors wired/wireless communication systems. Remote mounted only.	**24** 24" **48** 48" **72** 72" **96** 96"

Power Cord	Mounting Hardware	Canopy Mounting/Style	Canopy Shape/Finish
SL Gloss Silver **WH** Gloss White **BK** Gloss Black	**WHMH** White Mounting Hardware **BKMH** Black Mounting Hardware **CHMH** Chrome Mounting Hardware	**C2** 2" Standard Canopies at all cables for hard ceiling/gyp (Standard Surface Mounted Appearance) **C2SF** 2" Flush Canopy with spackle flange ring at all cables for hard ceiling/gyp **C2FR** 2" Flush Canopy with spackle flange ring at power feed cables & Reveal Canopy for non power feeds for hard ceiling/gyp **C2R** 2" Canopy with 1/8" Reveal at all cables **9T2*** 9/16 Grid Clip Mounted - 2" Standard Canopies at all cables **1T2*** 15/16 Grid Clip Mounted - 2" Standard Canopies at all cables **ABT2*** Armstrong Interlude/Bolt Slot Grid Clip Mounted - 2" Standard Canopies at all cables *Fixture mounting to be installed in line with Main Beams or Cross Tee's. Not designed to be mounted on grid segments perpendicular to fixture run.	**RNW** Round Matte White **RNB** Round Matte Black **RNS** Round Silver **SQW** Square Matte White **SQB** Square Matte Black **SQS** Square Silver

* Due to our culture of always striving for product enhancement, specifications and information within this document are subject to change without notice. 2020 Extant Lighting, Inc. All rights reserved.

Specifications

CONSTRUCTION Heavy gauge 6063 extruded aluminum housing.

OPTICS MEO™ delivers exceptional light quality with seamless illumination and uniformity with no pixelation, hot spots or lens breaks up to 250' continuous rows. Specify Batwing, Diffused (Lambertian), or Glare Control optics.

LIGHT OUTPUT (3) Standard lumen packages are available: Low (DLL), Medium (DML) and High (DHL). Specified Lumen Output (SLO) packages available. Please see the (SLO) configurator at ExtantLighting.com.

LEDS Latest generation of premium Nichia 3-step MacAdam Ellipse LED's available in (90+ CRI) 2700K, 3000K, 3500K, 4000K, and 5000K. Tunable White available. LED modules are easily accessible and replaceable.

VOLTAGE Universal 120/277V (VU) and 347V (V3) available. Consult factory for driver options when 347V is specified.

EMERGENCY BATTERY Factory provided low profile 10W emergency battery for UL924 required 90-minute run time.

FINISH Premium Powder Coated Wood Grain finishes available along with Ceramic White, Corten Steel, Charcoal Gray, Matte Black and Silver Anodized finishes.

CONTINUOUS ROWS Clip on shrouds provide a future proofed design and the flexibility to update the finish without replacing the entire fixture. Seamless continuous rows with no lens breaks, pixelation or hotspots up to 250 feet.

MOUNTING Spackle Flange, 15/16" or 9/16" T-Grid clip, 15/16" or 9/16" Grid Tegular, Bolt Slot or Armstrong Interlude/USG Identitee.

APPROVALS UL and cUL Listed. Approved for Dry/Damp locations. Made in the USA. BABA compliant in most configurations. Chicago Plenum Approved.

LUMEN MAINTENANCE (L70) 70% of initial light output = Reported > 60,000 hours | Calculated > 200,000 hours (L90) 90% of initial light output = Reported > 60,000 hours | Calculated > 200,000 hours.

LENS Rollable optic film for continuous illumination up to 250 ft in length.

WARRANTY All Extant fixtures offered with a 5-year limited warranty which covers LED, driver and fixture. For further details, refer to General Warranty and Obligations at ExtantLighting.com.

PATENTS Extant Lighting's intellectual property is protected under Patent No. US 11,378,262 B2 and 12,007,101 B2 by the U.S. Patent Office.

Dimensions

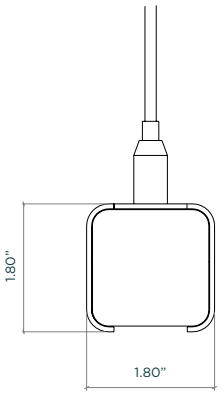

CAT-1PDT

Joiner Bracket (Linear Runs)

Unique Joining bracket design eliminates light leak at linear run segment joints and finished shrouds hide the connection maintaining the architectural and sleek aesthetic.

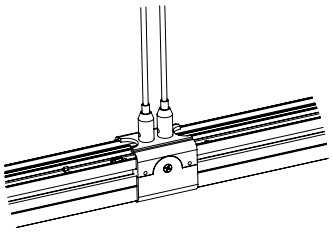

JOINED SEGMENTS

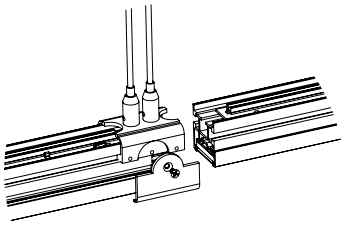

EXPLODED VIEW OF JOINER BRACKET AND SEGMENTS

Removeable Shrouds

Removable shroud allows fixture to be updated to new finish if a redesign of the space is needed in the future.

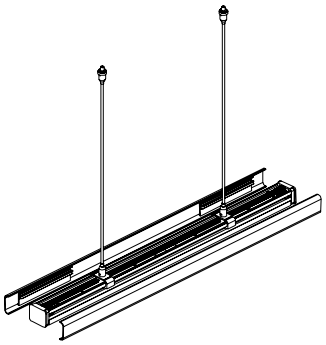

EXPLODED ISOMETRIC VIEWS (FROM ABOVE)

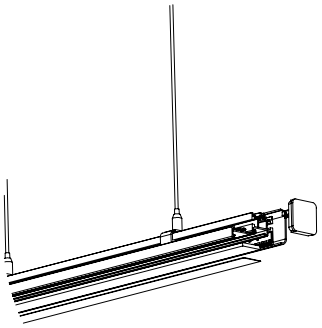

EXPLODED ISOMETRIC VIEWS (FROM BELOW)

* Due to our culture of always striving for product enhancement, specifications and information within this document are subject to change without notice. 2020 Extant Lighting, Inc. All rights reserved.

Mounting Details

STANDARD CANOPY



ROUND SURFACE



SQUARE SURFACE

CANOPY WITH REVEAL



SQUARE REVEAL



ROUND REVEAL

FLUSH CANOPY



ROUND FLUSH



SQUARE FLUSH

CANOPY ELEVATION VIEW



CANOPY WITH REVEAL (SURFACE)

FLUSH CANOPY SPACKLE FLANGE

STANDARD CANOPY

SPACKLE FLANGE FLUSH CANOPY LINE DRAWING WITH J BOX.

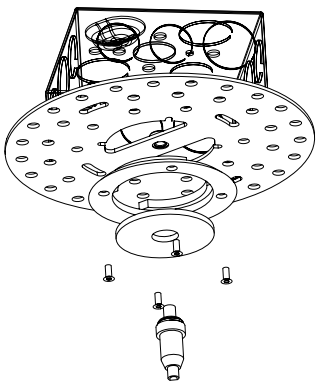

* Due to our culture of always striving for product enhancement, specifications and information within this document are subject to change without notice. 2020 Extant Lighting, Inc. All rights reserved.

Finishes



WG1
Premium Light Wood Grain

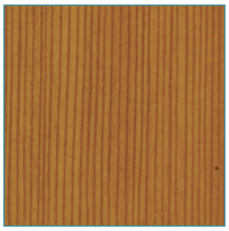

WG2
Premium Medium Wood Grain



CRP
Powder Coated Corten Steel

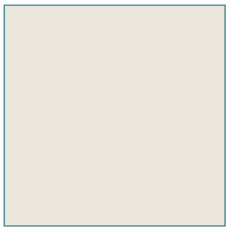

CWP
Powder Coated
Matte Ceramic White



CGP
Powder Coated
Matte Charcoal Gray

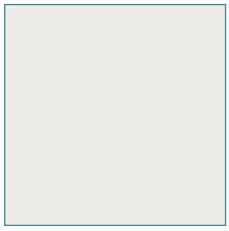

MWP
Powder Coated Matte White



BP
Powder Coated Matte Black



SA
Powder Coated
Silver Anodized

CUSTOM FINISH OPTONS

- **CC** Powder Coated Custom RAL Color
- **PCF** Premium Custom Finish

End Cap Finishes



ECRP
Powder Coated Corten Steel

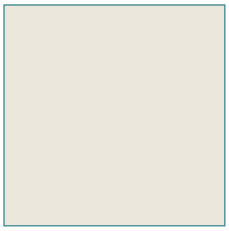

ECWP
Powder Coated
Matte Ceramic White



ECGP
Powder Coated
Matte Charcoal Gray

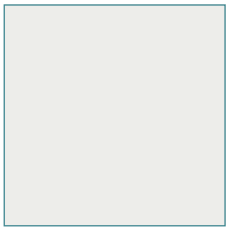

EMWP
Powder Coated Matte White



EBP
Powder Coated Matte Black



ESA
Powder Coated
Silver Anodized

CUSTOM FINISH OPTONS

- **ECC** Powder Coated Custom RAL Color

* Due to our culture of always striving for product enhancement, specifications and information within this document are subject to change without notice. 2020 Extant Lighting, Inc. All rights reserved.

Microstructure EdgeTech Optics™ (MEO™)

Microstructure EdgeTech Optics™ (MEO™) utilizes high efficiency Microstructure Lenses and Light Guide Plates for high optical extraction and precise light management. MEO™ delivers exceptional light quality with seamless illumination and uniformity with no pixelation, hot spots or lens breaks up to 250' continuous rows.

DIRECT

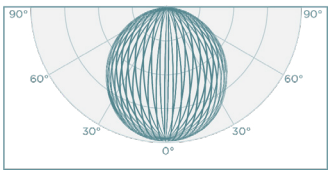

MEODF
LAMBERTIAN

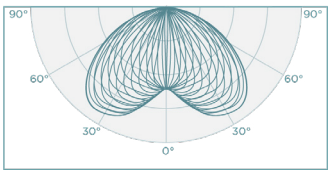

MEOBW
BATWING

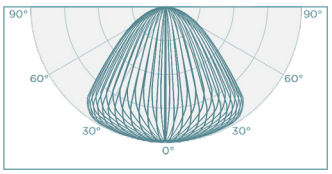

MEOGC
GLARE CONTROL

End Cap Styles

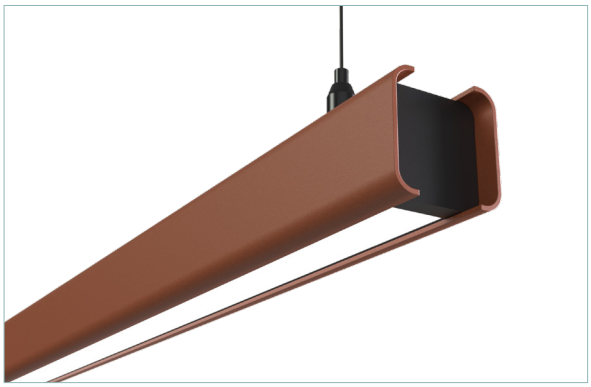

INSET END CAPS



FLUSH

* Due to our culture of always striving for product enhancement, specifications and information within this document are subject to change without notice. 2020 Extant Lighting, Inc. All rights reserved.